Paulmann

Safety Instructions

0,1,2,3,4,5b,6,7,8,9,10,
11,12,15,16,17,19,20,21,
22,23,25,26,27

Info Hotline
+49 (0) 5041 998 389
Mon.-Do. 7⁰⁰-20⁰⁰
Fr. 7⁰⁰-17⁰⁰

Paulmann Licht GmbH
31832 Springe / Germany
www.paulmann.com
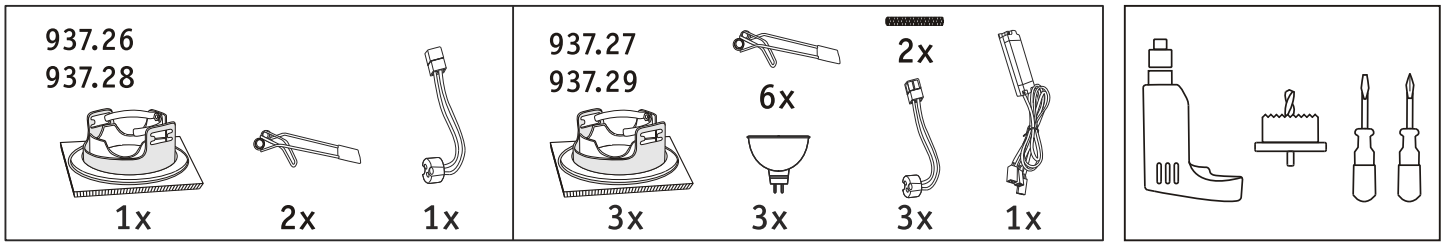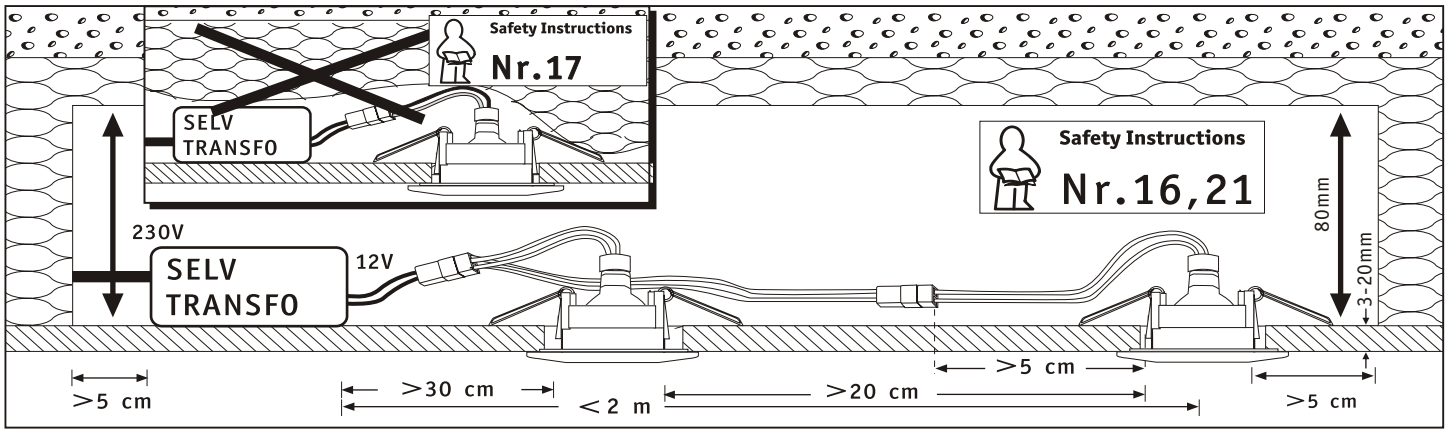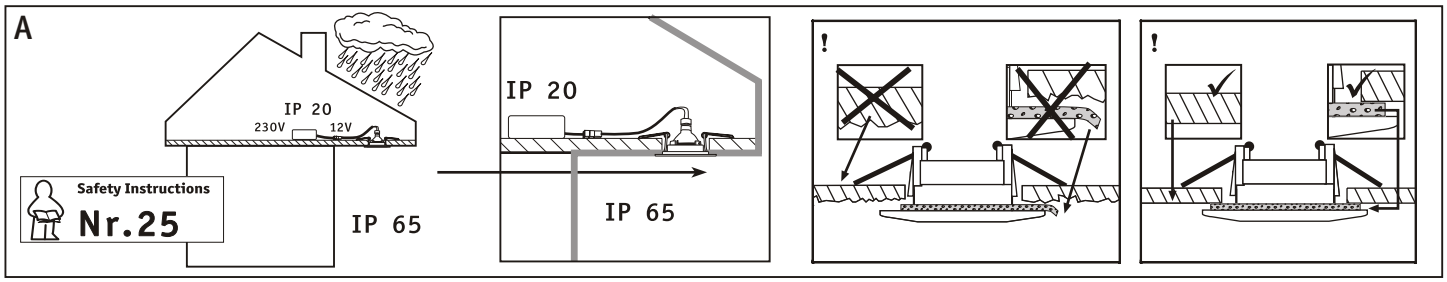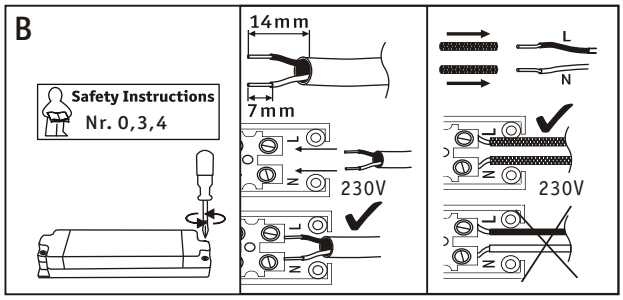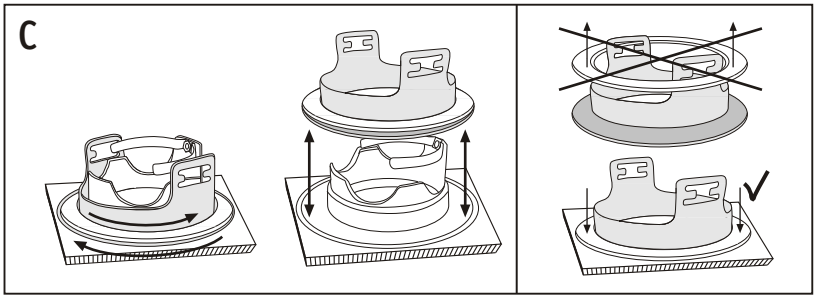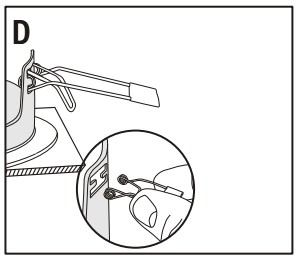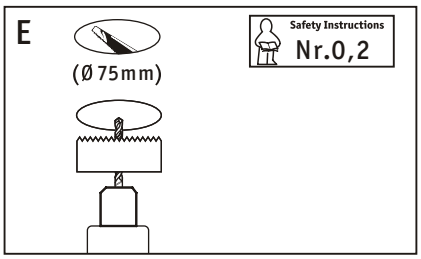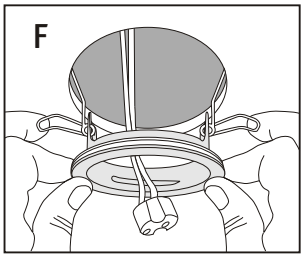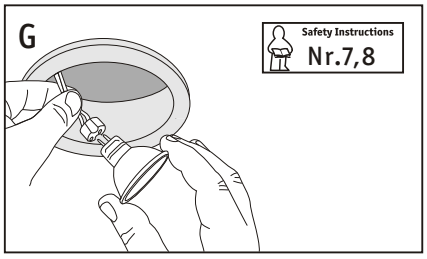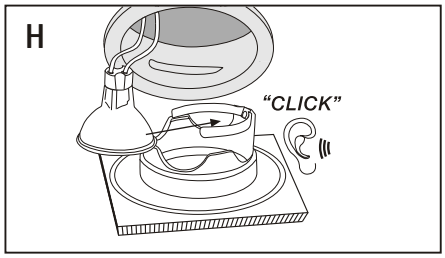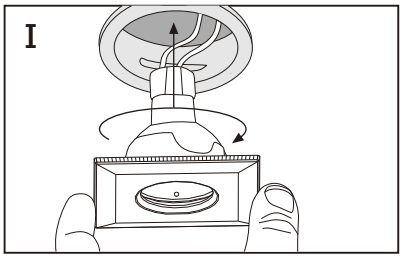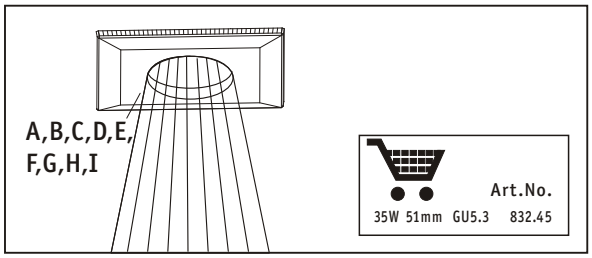
Art.-Nr.:
93726
93727
93728
93729
(+MA 173)
PBO 06/10